Current Opinion in Solid State and Materials Science 16 (2012) 115–125

Contents lists available at SciVerse ScienceDirect

Current Opinion in Solid State and Materials Science

journal homepage: www.elsevier.com/locate/cossms

Solute–point defect interactions in bcc systems: Focus on first principles modelling in W and RPV steels

C.S. Becquart [a,c,*], C. Domain [b,c]

[a] Unité Matériaux Et Transformations (UMET), UMR CNRS 8207, Université de Lille 1, ENSCL, F-59655 Villeneuve d'Ascq Cedex, France
[b] EDF-R&D, Département Matériaux et Mécanique des Composants (MMC), Les Renardières, F-77818 Moret sur Loing Cedex, France
[c] Laboratoire commun EDF-CNRS Etude et Modélisation des Microstructures pour le Vieillissement des Matériaux (EM2VM), France

ARTICLE INFO

Article history:
Available online 27 January 2012

Keywords:
Solute atom
Point defect
Modelling
Microstructure
Bcc metals
Iron
Tungsten
Ab initio
Density Functional Theory
Electronic structure calculation

ABSTRACT

The microstructure of materials and its evolution are influenced by the interaction of point defects with the solute atoms, already present or introduced by irradiation. Electronic structure calculations are nowadays intensively used to characterise these interactions. Prediction of the consequences of these interactions on the microstructure evolution, for instance on the diffusion properties, can be obtained from raw first principles data or more often, by introducing these data in higher scale models. This paper reviews the current knowledge, gained from recent intensive sets of first principles calculations, of the interactions between point defects (vacancies and self interstitial atoms) in Fe and W matrix, and solute elements, both substitutional (mostly 3d, 4d and 5d transition metals) and interstitial (C, N, H and He).

1. Introduction

Solute atoms, whether they are voluntary added to tailor the properties of a metal, left from the elaboration process, or introduced during the component lifetime as a result of radiation damage, can affect the properties of materials. One of the reason is that many of them interact strongly with the point defects and change their mobility. One characteristic example is C, a typical impurity found in bcc metals, whose prominent influence on point defect properties, specially the vacancies, is demonstrated in Fe in the isochronal experiments of Takaki et al. [1], or in the positron annihilation experiment of Vehanen et al. [2].

In this paper we review the knowledge gathered on the interaction between solute atoms with point defects in two materials of interest in the field of radiation damage: ferritic steels which are used for pressure vessel reactors and tungsten which is one of the promising candidate for the divertor plate in the International Thermonuclear Experimental Reactor (ITER). Under typical uses of structural materials, the only point defect one worries about is the vacancy as the Self Interstitial Atom (SIA) has a very large formation energy and diffuses so quickly that it disappears at material sinks such as dislocations, grain boundaries and so on. The vacancies are thus the dominant self-defects at equilibrium in metals. However, under irradiation conditions, both kinds of point defects are introduced in large amount and during their migration can induce many reactions in the material. A typical example is the non-equilibrium segregation process called radiation-induced segregation (RIS), which can occur as a consequence of either an inverse Kirkendall Effect, or if a strong interaction between solutes and the point defects generated during irradiation exist, by the formation of tightly bound and mobile solute–point defect clusters leading to a dragging of the solute by the point defect. As a result a coupled transport of the solute atoms by the point-defect fluxes to and away from sinks (voids, dislocations, dislocations loops, grain boundaries and so on) can take place. The magnitude of the solute–point defect binding energies as well as the migration barriers for the point defect to jump determine whether the solute flow will be towards or away from the sinks at the temperature of interest. The influence of solute atoms on the point defect mobility can arise from either a chemical interaction between the solute atom and the point defect or more indirectly from the strain induced by the solute, which modifies the saddle points encountered by the point defect during its migration.

We will distinguish between substitutional solute atoms which can be either voluntary added to tailor the properties of a metal or left from the elaboration process, and foreign interstitial atoms (FIAs). In the later case, we will make a distinction between fast

* Corresponding author. Address: Unité Matériaux Et Transformations (UMET), UMR CNRS 8207, Université Lille Nord de France, Bâtiment C6 – 2ème étage, Bureau 217, 59655 Villeneuve d'Ascq Cedex, France. Tel.: +33 (0) 3 20 43 49 44.
E-mail address: Charlotte.becquart@univ-lille1.fr (C.S. Becquart).

1359-0286/$ - see front matter © 2012 Elsevier Ltd. All rights reserved.
doi:10.1016/j.cossms.2012.01.001

diffusing species such as He and H and slower ones: C and N. Despite the fact that He ground state configuration is substitutional in Fe and W, we will consider it as a FIA in this article.

In the case of substitutional solute atoms, one of the main issues related to their interactions with point defects is the possibility for the solute atoms to migrate, as these elements are too big to migrate without the help of vacancies or SIAs. The introduction of a large amount of point defects, can, as a result of the solute atom diffusion, lead to the formation of radiation-induced or radiation-enhanced phases usually associated with changes in the mechanical properties of the materials. Substitutional solute atoms can also act as traps for the point defects and/or modify the structure and therefore the stability and migration properties of point defect clusters. For He and H, the issues are the formation of bubbles and voids, and in that regards, the point defects tend to act as traps for the fast diffusing FIAs. For C and N, interactions with point defects will also impact on their diffusivity. On the other hand, all the FIAs can themselves modify the migration properties of the point defects and as a result have an influence on the microstructure formed under irradiation.

Experimental data about interactions between point defects and solute atoms are scarce and difficult to obtain. Electronic structure, i.e. first principles calculations which provide information at the atomistic level are thus essential to obtain this kind of data, more especially as, today, supercells containing a large number of atoms can be used. However, predicting the impact of these interactions on the microstructure evolution requires a multi-scale approach as different time and length scales are involved which must be tackled using different modelling techniques. Since the last 10 years, a large amount of studies have been devoted to these issues, using complementary techniques such as Density Functional Theory (DFT) calculations, Molecular Dynamics (MD), Kinetic Monte Carlo (KMC), Mean Field Rate Theory (MFRT) and Dislocation Dynamics (DD). It is out of the scope of this paper to present and discuss these techniques, but an overview of the strategy followed nowadays to model the evolution of metallic alloy microstructures under irradiation can be found in [3] which provides a large number of references to the different techniques involved.

This paper is organised as follows. A short section is first devoted to provide a brief insight on the current understanding about point defects and their clusters in bcc Fe and W. We then present the existing knowledge, mostly obtained through the use of electronic structure calculations, regarding the interactions of substitutional solute atoms, slow diffusing FIAs (C and N) and fast diffusing FIAs (He and H) with point defects and their clusters. The discussion section tries to draw a general picture of the data presented in the previous sections. The last section presents what we believe are the tracks for future research in this field.

2. Point defect and point defect clusters in bcc Fe and W

In bcc metals, the SIAs are dumbbells, i.e. two atoms sharing one crystallographic site. The relative stability of the possible configurations ($\langle 100\rangle$, $\langle 110\rangle$ dumbbells or $\langle 111\rangle$ crowdion) has proven to be significant in predicting the SIA migration behaviour in Fe [4]. Experiments [5] and DFT calculations [6,7] agree that the $\langle 110\rangle$ dumbbell configuration is the most stable in α-Fe, at variance with the $\langle 111\rangle$ crowdion found in most of the other bcc metals [8,9]. These calculations are quite tricky because of the strain field induced by the SIA and they need to be performed with large supercells. Indeed, our DFT calculations in W lead to an energy difference between the $\langle 110\rangle$ dumbbell and the $\langle 111\rangle$ crowdion, $\Delta E_{\langle 111\rangle-\langle 110\rangle}$, very close to 0 eV for a 54 atom supercell, 0.26 eV for a 128 atom supercell and 0.38 eV for a 250 atom supercell.

Because the SIA most stable configuration differs for W and Fe, their migration properties are also quite different. In Fe, DFT calculations [7] showed that the $\langle 110\rangle$ dumbbell migrates via first nearest neighbour jump combining both a translation and a 60° rotation as proposed by Johnson [10] with a barrier of 0.34 eV. In W, the $\langle 111\rangle$ crowdion moves along $\langle 111\rangle$ directions. Its migration energy is very low in agreement with the experimental finding of Tanimoto [11] who proposed that the SIA is mobile below 1.5 K. It was found to be close to 0.005 eV according to the DFT calculations in [12] or 0.013 eV according to MD simulations performed with an empirical potential fitted on DFT data [13]. Further studies with this interatomic potential indicate that the SIA changes $\langle 111\rangle$ direction with a rotation energy of 0.38 eV.

The structure and mobility of SIA clusters have also a profound importance on the microstructural evolution of irradiated materials. Studies of SIA cluster production in cascades indicate that they form following the collapse of displacement cascades, at the shell of vacancy rich cores, and can develop into perfect dislocation loops. Up to 50% of the SIAs produced in high energy cascades can be found in the form of interstitial clusters [14]. The importance of understanding the production, mobility, and character of the SIA clusters has been emphasised in a vast range of irradiation effects including irradiation-induced hardening and embrittlement, creep, and swelling and is not the subject of this paper. We will just recall that all the theoretical work done so far indicate that they are stable in both Fe and W and very mobile.

The stability and mobility of vacancy clusters is also important. In Fe, di-vacancies and small voids are stable. The vacancy binding energy to small vacancy voids using DFT can be found for instance in [15]. The most stable configuration for the di-vacancy is when the two vacancies are second nearest neighbour from one another [6]. In tungsten, the situation is completely different as the di-vacancy is not stable [9], the tri-vacancy binding energy is close to zero, and it is only when one aggregates together four vacancies that an attractive interaction does form.

Regarding the vacancy cluster mobility, it was found in Fe [16,17] that the jumps of matrix atoms at the surface of a vacancy cluster, which result in cluster shape change and movement, can have noticeably lower activation barriers than the vacancy migration energy in the bulk. As a result, small vacancy clusters (of size two or three), are as fast as or even faster than a mono-vacancy. Note however, that their low stability against thermal dissociation at the temperatures of interest indicate that they will not contribute in a significant manner to self-diffusion.

The information related to the interactions of point defects with solute atoms is in many cases obtained experimentally using recovery techniques [1,18–20]. Point defects are introduced in the sample, usually at low temperatures, using for instance electron irradiations. The samples are then heated up according to a predefined ramping program and the evolution of a property such as the sample resistivity is monitored during the heating of the sample. Changes in the property are then associated with changes in the point defect population. These methods are thus indirect. In the case of fast diffusing FIAs such as He or H atoms, the FIAs are introduced in the sample, for instance by implantation. The samples are heated up, and desorption of the FIAs is monitored versus temperature. The temperature at which a given change is observed in the resistivity or in the desorption spectrum is then associated to an activation energy using simple models. For desorption, most of the time first order kinetics [18,21–23] is assumed. The temperature at which a peak is observed is associated with the maximum dissociation rate and the activation energy for the process (i.e. the dissociation energy) E_d, associated to that temperature T (or vice et versa) is the solution of the following equation:

$$\frac{E_d}{kT^2} = \frac{\nu}{\beta} \exp\left(\frac{-E_d}{kT}\right);$$

where ν is an attempt frequency, $\beta = dT/dt$, is the heating rate and k is Boltzmann constant.

The relation between the defect migration energies E_m and the temperature T at which peaks are observed in resistivity recovery experiments can be obtained from an estimate of the point defect mean free path L [1]. When the sample is maintained during t seconds at temperature T, the mean free path L can be obtained as follows:

$$L = \sqrt{Dt} = \sqrt{\nu a^2 \exp(-E_m/kT)t},$$

where D is the diffusion coefficient, a the jumping distance. The migration energy can then be deduced:

$$E_m = -kT \ln \frac{L^2}{\nu a^2 t}$$

The value chosen for L is typically of the order of a few nanometers. For instance, in [1], a mean free path of 5 nm in Fe provides a good estimation of migration energies associated with the temperatures at which resistivity peaks are observed.

These simple models underline the fact that the estimate of the activation energy from the temperature at which a change is observed depends, aside from the model chosen, on the choice of the attempt frequency and of the mean free path.

If the solute atom cannot diffuse with the defect as in the case of helium in a single vacancy in W, the energy which will characterise "de-trapping" (the release of the most mobile species) is the dissociation energy i.e. the sum of the migration energy of the most mobile species and its binding energy. For most of the experimental conditions encountered in the literature, "de-trapping" will happen typically at room temperature for dissociation energies roughly above 0.8 eV. When exchange mechanisms between the solute atom and the point defects are involved, such as in the case of solute-vacancies (Cu in Fe) or mixed dumbbells (Mn in Fe), the mobility depends also on different intermediate migration barriers.

3. Substitutional solute atoms in Fe and W

The substitutional solute atoms which have been investigated so far are for Fe, the main alloying elements of the RPV steels, mainly, Cu, Ni, Mn, Si et P, as well as Al and Cr; whereas in W the studies which are less advanced than in Fe have focused on Re as it can be obtained by transmutation of W and is also commonly used as an alloying element of W to increase its re-crystallisation temperature and its ductility, Mo as it is the native impurity of W and Os which can be obtained from transmutation of Re.

To determine the behaviour of a solute atom in the presence of point defects, and more precisely whether the flux of solute atoms will move in the same direction as or against the flow of point defects, one has to determine the transport or phenomenological coefficients L_{ij} more commonly known as the Onsager matrix [24]. This can be done theoretically [25,26] or using kinetic Monte Carlo [27,28]. The description of the diffusion properties in terms of solute and solvent jump frequencies and interaction energies for the vacancy is usually obtained following the framework proposed by Le Claire [29]. According to this diffusion model, the self-diffusion coefficient and the diffusion coefficient of an impurity in crystal can be expressed through analytical expressions depending on the atomic jump frequencies of the vacancy.

The atomic parameters impacting on the migration of the solute atoms are thus their binding energies with the point defects for different configurations as well as the different barriers the point defect has to overcome in order to be able to migrate in the neighbourhood of the solute. This is now easily obtained using electronic structure calculations [30,31,26].

In this article, by convention, positive binding energies correspond to attractive interactions. Some of the DFT data obtained for W and Fe are new results. They have been performed using the Vienna *Ab initio* Simulation Package VASP [32], with Blöchl's projector augmented-wave (PAW) method within the Generalised Gradient Approximation (GGA) of Perdew and Wang. The pseudo-potentials were taken from the VASP library. Calculation details can be found in [41].

3.1. Interactions of substitutional solute atoms with the vacancies

In the case of the vacancy, it was shown [33] that if the interaction energy is significant in the first nearest neighbour shell, the migration of the solute can only take place in the opposite direction to the vacancy flux. If the range of interaction is longer and attractive, then the vacancy can move around the solute atom, remaining bound to it and co-migration can take place. The vacancy can thus drag the solute atom as a bound complex [27]. Whether or not co-migration will effectively take place depends of course on temperature.

The determination of the binding energies and migration barriers for solute atoms in α-Fe and the study of their coupling with point defect fluxes either using KMC or analytical expression has been done so far only for P, Cu, Ni and Cr. These studies indicate that P [27] and Cu can migrate through a vacancy drag mechanism [28] at all temperatures for which the bcc structure is preserved. Furthermore, Soisson and co-workers [34–36] showed that because of the strong interaction of the vacancy with Cu, the migration of small Cu clusters of all sizes, including large ones (i.e. full coherent precipitates), are mobile, as a consequence of complex series of vacancy hops at their surface or near the surface. They also observed direct coalescence of clusters, as the result of migration. On the other hand the attractive interaction energies between Ni and Cr and a vacancy in the first and the second nearest neighbour shell are low and dragging of these two solutes by vacancies can only take place at very low temperatures and not at the temperatures of interest in the context of pressure vessels operation [26].

Systematic studies [37,38] of the interactions of transition metal (TM) solutes in α-Fe indicate that most of them bind with vacancies in the first nearest neighbour shell. However, for all early elements, the interaction of the second nearest neighbour shell is often repulsive and that of the third nearest neighbour shell usually very weak. A vacancy drag mechanism can thus be expected for late transition metal solutes in Fe and not for early transition metal solutes with the exception of Mn, Zr and Hf. This remains however, to be confirmed by the calculations of the proper migration barriers. For Al, according to [39], the interaction energy between the vacancy and an Al solute atom is significant only in the first coordination sphere. The migration of Al should thus take place in the opposite direction to the vacancy flux.

The influence of substitutional atoms in W has not been investigated in the length of what has been done in Fe. Binding energies between solute atoms and point defects in this material published so far [40,41] concern only C, Mo and Re. According to [42] in certain applications and after long service as many as 25% of the W atoms can be transmuted. We have recently determined the binding energies with many of the solute atoms found in a commercial tungsten used to study He implantation [43] as well as Ta and V which are nowadays investigated as these two elements have been proposed for use as functionally graded tungsten for joining purposes. Our DFT results indicate that unlike what was observed in Fe, early 3d transition metals do not bind with the vacancy in the first nearest neighbour shell, early 4d and 5d transition metal bind with the vacancy in the first nearest neighbour shell but the

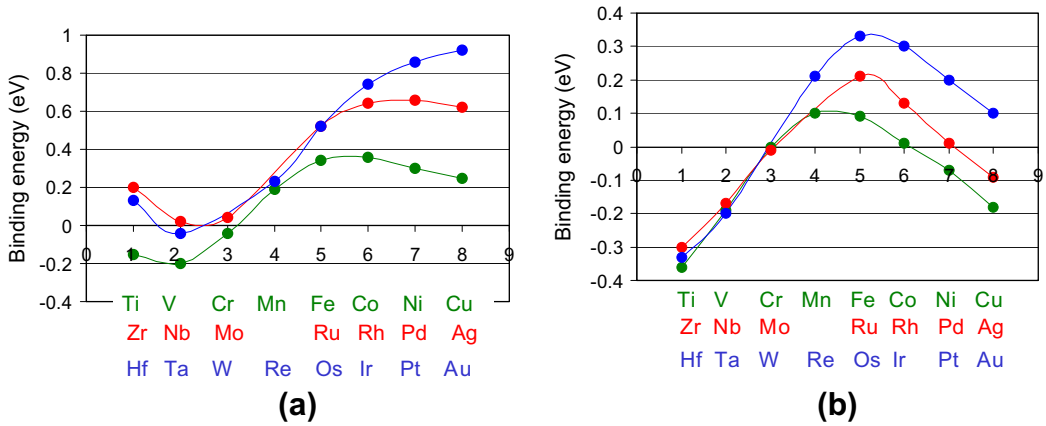

Fig. 1. Binding energies (eV) between solute atoms and a vacancy in W as predicted by DFT calculations. (a) First nearest neighbour configuration, (b) second nearest neighbour configuration. The calculations were performed using the VASP code, in the PAW approach and 128 atom supercells. All the solute elements were found to be nonmagnetic.

interaction is repulsive in the second coordination sphere. Based on binding energy considerations only, our results indicate thus that a vacancy drag mechanism can be expected at temperatures of interest for Fe, Rh, Os and Re (Fig. 1). Among the other solutes we have investigated, P, Pb and K are also plausible candidates for a vacancy drag mechanism.

All TM solutes bind to the vacancy in the first coordination sphere in Fe, the same is true for tungsten except for early 3ds and Ta. However, similarly to the conclusions drawn in Fe [38], size effects are not sufficient to predict the overall behaviour of solute atoms in the presence of point defects in W and the interactions result from a delicate balance between the electronic structures and size effects which need to be investigated in more details.

3.2. Interactions of substitutional solute atoms with SIAs

Solute transport via an interstitial mechanism can take place if mixed dumbbells form and migrate [44]. Similarly to the case of vacancies, one needs thus to know what kind of interaction the solute establishes with the SIA, and the appropriate migration barriers. These data have been determined in α-Fe for Cu [6] P [30,45] Mn and Si [31], Ni [31,26], and Cr [46,47,26]. The results obtained so far indicate that Mn, P and Cr can bind to the SIAs and form mobile mixed dumbbells, which implies that for these elements solute transport can take place via the motion of these mixed dumbbells. The mixed $\langle 110\rangle_{Fe-P}$ dumbbell was found to be mobile but trapped by other P atoms in the matrix, and the effective diffusion coefficient of interstitials are reduced consequently [30,45]. The interaction of two phosphorus atoms with a ⟨110⟩ self-interstitial atom may also lead to some stable and *a priori* sessile configurations. The systematic DFT study in [38] confirms that Mn and Cr seem to be the only transition metal solutes for which transport can be achieved by an interstitial mechanism in Fe. Regarding other possible interactions between solute and the ⟨110⟩ dumbbell in Fe, it was found that Si [31], Mn, but also Ni and Cu [38] to a lesser extent, can bind with the SIA in a compression zone, whereas all transition metal solutes but Cr and Co bind with the SIA when situated in a tensile zone. The discrepancy between the earlier results of Vincent et al. [31], and the more recent ones [38] is very likely due to the DFT method used, the Ultra Soft Pseudo Potentials (USPPs) being less appropriate in most cases than the more precise Projector Augmented Wave (PAW) according to [38]. Using DFT calculated barriers and the model proposed by Barbe et al. [25], Choudhury and co-workers [26] found that Cr is a faster diffuser than Fe which in turn diffuses faster than Ni when considering interstitial mediated diffusion.

Under irradiation conditions, Cr, Mn and P appear to be then capable of diffusing via both interstitial and vacancy mechanisms in Fe. Cr should migrate opposite the vacancy flux and in the same direction as the interstitial flux, whereas P and Mn should migrate in the same direction as the point defect flux for both kinds of point defects.

In tungsten, we found that Re is stable as a mixed ⟨111⟩ crowdion, however, whether the solute can be transported or not during the migration of the dumbbell has not been investigated so far.

The case of solute interactions with SIA clusters is much more complicated and at the moment not many results are available. The energy landscape of small interstitial clusters is already not so easy to produce, and adding solute atoms will definitively increase the difficulty. The road towards such an accomplishment is probably through the use of very good interatomic potentials and methods that systematically search for the minima and saddle points such as the ARTn method [48].

One last issue which needs to be mentioned is that when the formation of small $nv{\cdot}m$X or nI$\cdot m$X complexes is favourable, these complexes can trap edge or screw dislocations affecting thus the mechanical properties of the material. Advanced atomistic kinetic Monte Carlo simulations, parameterised on DFT data, that include not only thermodynamics driving forces, but also a correct description of the diffusion of solute atoms, via both vacancy and SIA mechanisms, thereby allowing for the effects of irradiation, were used to model Fe–0.18Cu–1.38Mn–0.69Ni–0.47Si–0.01P neutron irradiated under 5.8×10^{-5} dpa s^{-1} at 300 °C. At 20 mdpa a large number of solute clusters were observed to form, the largest ones always associated with point defect clusters. Clusters associated with interstitials are mostly enriched in Mn, and P/Ni, whereas clusters associated with vacancies are enriched in Si/Cu/Mn (mostly) and Ni. These simulations indicate that a radiation induced segregation mechanism can account for the formation of these clusters and underline thus the significant role of point defect interactions in the microstructure evolution under radiation as the mechanism of solute cluster formation in this alloy is mainly heterogeneous nucleation on point-defect clusters.

4. C and N

Carbon is one of the most commonly found residual impurity in bcc metals. It is also added to iron to increase its hardness, whereas nitrogen is well known for its ability to improve the pitting and crevice corrosion resistance of stainless *steels*. Below their solubility limits, the presence of even a very little amount of these

impurities in interstitial positions (a few tens ppm), can have a drastic influence on the steel properties, as they build strong interactions with the lattice defects available. It is for instance well known that the interaction of C with dislocations and/or substitutional atoms has important effects on the yield stress and the subsequent mechanical properties of the materials. Finally, FIA diffusion in steels is of real technological importance as, among other effects, they have been found to segregate around dislocations forming what are called Cottrell atmospheres which have been proposed to be responsible of strain ageing in steels.

Similar to the case of substitutional solute atoms, a lot of studies have been devoted to the case of Fe. The results in W come from our own work, not all of which has been published.

Being small enough, C and N both occupy octahedral sites of the bcc matrix in Fe [49] and W. As these two FIAs most stable interstitial configuration is the octahedral site, the minimum energy path (MEP) for their diffusion goes through a tetrahedral site. Their migration energy is simply given by the difference in energy between the two possible interstitial sites as the tetrahedral site is, according to our DFT calculations, a saddle point. According to the DFT data presented in Table 1, in Fe, C and N atoms will start diffusing at higher temperatures than the vacancy as their migration energy is close to 0.2 or 0.3 eV higher than the vacancy migration energy, whereas in W, it is the opposite, i.e. the two FIAs will start diffusing at lower temperatures than the vacancies.

Table 1
Summary of the properties of C and N in Fe and W as predicted by DFT calculations.

	W	Fe
FIA binding energy with a vacancy (eV)		
C + v → C·v	2.01 [40]	0.47 [49]
	1.38 [52]	0.65[a]
		0.41 [53]
		0.52 [50]
		0.65 [50]
N + v → N·v	2.5[b]	0.71 [49]
	1.91 [52]	0.92[a]
FIA binding energy with a SIA (eV)		
C + I → C·I	⟨110⟩ 0.51. conf. 1 of Fig 2a	⟨110⟩: 0.17[a] conf. 7 of Fig. 2a
	⟨111⟩ 0.62. conf. 1 of Fig 2b	
N + I → N·I	⟨110⟩ 0.64[b] conf. 1 of Fig. 2a	⟨110⟩: 0.18[a] conf. 7 of Fig. 2a
	⟨111⟩[b] 0.72. conf. 1 of Fig 2b	
FIA and vacancy migration energy (eV)		
E^C_{mig}	1.47[b]	0.91 [49]
	1.24 [52]	0.85[a]
E^N_{mig}	0.71[a]	0.77 [49]
	0.72 [52]	0.71[b]
E^V_{mig}	1.66 [9]	0.65 [6]
		0.6[a]

[a] Unpublished data obtained using VASP, 250 atom supercells, in the PAW approach, with the Vosko–Wilk–Nusair (VWN) interpolation of the correlation energy.
[b] Unpublished data obtained using VASP, 128 atom supercells, in the PAW approach.

4.1. Interactions of C and N with the vacancies

Both C and N bind strongly with the vacancy in Fe [49] and W but the interacting energy is always higher for N than for C. Neither FIAs become substitutional, i.e. they do not fall in the vacancy but remain close to the octahedral site position (at half lattice parameter from the vacancy site). In Fe, DFT results done in our group but not published yet indicate that C atoms will stabilise voids. In W, less results are available, however, the di-vacancy which is unstable can be stabilised by the presence of C atoms in its vicinity [41].

The formation of $v{\cdot}n$C complexes is energetically favourable for small n ($n \leq 3$), with v.2C clusters being the most stable one [50,51]. We showed that this stability can be linked to the formation of a covalent bond between the two C atoms [49]. Note that such a covalent bond was not observed to form for a v.2N cluster. In Fe supersaturated with both vacancies and C atoms, the three most abundant species are the mono and di-vacancies and the v.2C clusters [51]. As could be expected, the vacancy diffusivity was shown to be significantly modified by the formation of vacancy-carbon complexes, exhibiting non-Arrhenius behaviour [50]. Furthermore, Kabir et al. found that the diffusivity decreases with increasing C content and becomes negligible when the C concentration exceeds twice that of vacancies [51].

4.2. Interactions of C and N with the SIAs

Regarding the interactions of C and N with SIAs, DFT results indicate, that the binding energy between a C or N and the ⟨110⟩ dumbbell in Fe, is repulsive when the two objects are close to each other, and more precisely as far as configuration 7 in Fig. 2a. The situation is completely different for W, as in this case the interaction with a C atom is attractive for both the ⟨110⟩ crowdion and the ⟨111⟩ dumbbell in W even at short distances. The introduction of SIA induces a large strain of the matrix. As a result, the octahedral sites close to the SIA become smaller. One possible explanation for the different behaviours mentioned above can be that the lattice parameter of tungsten being larger (3.17 Å versus 2.87 Å), the octahedral site remains large enough for a C atom to stay in, even for the high strains induced by the SIA nearby.

5. He and H

The behaviour of He in metals has been investigated for a long time, in particular in relation with radiation damage. Because it is

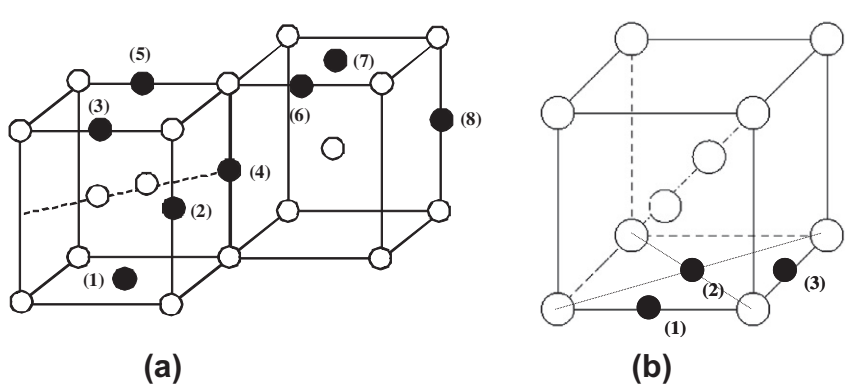

Fig. 2. a: the eight octahedral positions investigated around (a) ⟨110⟩ dumbbell, (b) the three octahedral configurations investigated around the ⟨111⟩ crowdion.

almost insoluble in all metals, He precipitates and the technological consequences of helium clustering are numerous: blistering, swelling, flaking, radiation creep and more generally helium-induced degradation. Modelling He in metals started more than 40 years ago [21,54] and a good understanding of He behaviour, in the presence of point defects or not was obtained using a combination of simulations and dedicated experiments such as ion channelling and Thermal Desorption Spectroscopy (TDS). Hydrogen has also been studied at great length and for decades as it can greatly change the mechanical properties of structural metals and alloys and cause material failure. Despite intense studies, the mechanism of H embrittlement in metals remains poorly understood but it seems now well established that the trapping of H to vacancies impacts the mechanical behaviour [55], has important implications for fuel recycling and tritium inventory in the walls of tokamak fusion reactors, and also bears on radiation embrittlement in fission and fusion reactors [56].

He, and even more H, being light atoms, their study using DFT is quite debated. For H, there is no question that the Zero Point Energy (ZPE) has to be taken into account in the calculations, but the reliability of the results can still be questioned [57]. However, studies of a bulk metal containing He and H using DFT is the only possible alternative at the moment.

DFT calculations indicate that both He and H most favourable interstitial site is the tetrahedral site [12,58–63]. As a result, as a tetrahedral solute may migrate between two equivalent sites without passing through an octahedral one, their migration energy is very low (in agreement with experiments [64,65,56]) as can be seen in Table 2, in contrast with C and N whose stable interstitial site is the octahedral site.

Regarding the formation of interstitial clusters, it was found that both in Fe and in W, the H–H states are unstable for small interatomic distances whereas He–He states are strongly bound [60,66–68]. A DFT investigation of this effect in W [67] indicates that the He–He interaction is purely elastic in nature and, as such, highly binding at close separation distances whereas the H–H interaction is almost negligible since the elastic binding effect is compensated for by the change in effective position of the H states in the electronic structure. If the H ions are at short separation distances, the bonding and anti-bonding states are asymmetrically shifted upwards in energy, thus raising the interaction energy to result in a weak repulsion instead of the weak attraction suggested by a pure elastic analysis. The asymmetric split depends on distance in the same manner as the elastic interaction does. As a result the formation of H blisters in Fe and W can only take place in the vicinity of a defect or a solute atom, whereas He can form stable clusters in an otherwise perfect matrix. These results confirm the effective-medium theory of Nørskov [69] which indicates that in most metals, the He–He and He-metal interactions are almost purely elastic whereas H is attracted to anywhere that has a low electron density.

First principles MD simulations performed in tungsten indicate that small He clusters are very mobile [70]. 2He clusters perform a 1D motion along ⟨111⟩ directions at low temperatures and migrate thus as fast or even faster than a single He atom. As the temperature increases, the motion becomes more and more 3D like. No such simulations have been done for Fe, however, there is no reason why small He interstitial clusters would not be mobile in Fe.

5.1. Interactions of He and H with vacancies

The formation of blisters and bubbles is directly connected to the strength of the interactions with vacancies and to a lesser extent with SIAs. Both species bind strongly with vacancies in Fe and W as can be seen in Table 2. Vacancies appear thus as potential traps for He and H atoms both in Fe and W. Enhanced accumulation of additional vacancies and helium or hydrogen atoms can thus take place, leading to bubble formation, and possible void swelling.

The DFT calculations indicate that for both W and Fe, H occupies a site displaced slightly towards an octahedral site (at half lattice parameter from the vacancy site), whereas He occupies the centre of the vacancy. Both He and H were also found to stabilise the divacancy in W [71,67].

The formation of small nHe·mv clusters has been investigated in Fe [22,60] as well as in W [40]. All the results indicate that helium stabilises vacancy clusters which, at temperatures relevant for fusion conditions, are mobile but unstable and dissociate, by reducing the vacancy emission rates. For both materials, the stability of small nHe·mv clusters against the thermal emission of vacancies or interstitial He atoms depends mainly on the relative concentrations of He and vacancies in the cluster, i.e. the n/m ratio. Clusters with large n/m ratios tend to emit a He atom whereas clusters with low n/m ratios tend to emit vacancies [22,60,40]. The cross-over between the He and vacancy dissociation curves provides information on the composition of the most stable clusters and on their stability. It is close to n/m = 1.3 in Fe according to [60] and roughly closer to n/m = 1.1 in W according to our calculations [41]. If small nHe·$m\boldsymbol{v}$ clusters seem to be more stable in W than in Fe, for high n/m ratio, the energy required to remove one He atom seems to be close to 2 eV for both materials.

One way of releasing a He atom trapped in a vacancy, is through the arrival of a SIA which will recombine with the vacancy. Such an event requires a small amount of activation energy depending on the local configuration [74], however, at the operating temperatures at which these materials will work in the conditions of nuclear power plants, the activation barriers will be easily over gone. The migration of substitutional He appears to be possible in Fe with the help of a second vacancy [60], however, the barrier is 1.1 eV and the diffusion will thus be much slower than for interstitial He. According to Caturla and co-workers [75] some controversy remains about the dominant mechanism for He migration under

Table 2
Properties (in eV) of He and H in W and Fe as predicted by DFT calculations.

	W		Fe	
	H	He	H	He
X + X → 2X	0.01 [67]	1.01 [61]	0.01 [68]	0.43 [60]
X + I → X·I	0.43 [23] 0.33	0.94 [41]	–	0.26 [74]
X + v → X·v	1.43 (1.28)[a] [23] 1.22[a] [67]	4.57 [41]	0.68 [72] 0.57 [73] 0.55 [58] 0.51 [68]	2.30 [60]
Migration energy (eV)	0.21 [12]	0.06 [61]	0.04 [59]	0.06 [60]
X + C → X·C		0.37 [40]	0.02 [68] 0.09 [73]	Repulsive [53]

[a] Without the ZPE correction.

irradiation conditions. Introducing the DFT data of [60] in a rate theory model, Ortiz and co-workers [76] find that He migration through the vacancy mechanism for conditions with low ratios of Frenkel Pairs (FPs) per He atom is negligible. Borodin et al. [77] on the other hand, introducing similar DFT data in a lattice kinetic Monte Carlo model find He·v clusters to be very mobile. Their simulations indicate even that small nHe·mv clusters (with $m > n$) in Fe are quite mobile, at least up to $m = 4$–5 and they can contribute noticeably to He transport at helium concentrations exceeding 100 appm [77]. In W, because of the instability of the di-vacancy, this kind of migrating event is more unlikely and has not been investigated so far.

The formation of nH·mv clusters has also been studied in Fe as well as in W. The total number of H which can be accommodated by a single vacancy varies from one author to another. Liu et al. [78] find that a single vacancy can accommodate up to 10 H atoms in W, but they do not provide an explanation on what they refer to as the H embedding energy and their definition of the ZPE is a bit unclear. For Ohsawa et al. [79] this number increases to 12 H atoms, whereas Heinola and co-workers [23] reports data up to 6 H atoms. Taking into account the H migration energy, the DFT data [79,23] indicate that at room temperature, a mono-vacancy will be capable of holding up to 5 H atoms. In Fe, the same kind of discrepancies is observed. An approach based on Effective Medium Theory [80] indicates that a vacancy can trap as many as 6 hydrogen atoms whereas DFT calculations reduce that number to 3 [58]. These authors also find that the 2H·v complex is the most stable and that the presence of hydrogen will induce anisotropic clusterizations of the vacancies in α-Fe.

In the context of fusion, the materials will be in contact with both He and H isotopes, the interactions of these two species with the point defects is thus also interesting, specially in the light of the quite complicated behaviour observed of W implanted with both He and D atoms as shown for instance in [81].

The formation of nHe·n'H·v ($n + n' \leqslant 6$) was investigated in [67]. For the cluster sizes investigated, the binding energy, for He as well as for H, was found not to depend very much on the number of He and H present within the vacancy. The He binding energy is in the range 3–4 eV and the H binding energy is around 0.8–1 eV. The results indicate that removing an He atom from a mixed nHe·$n'v$ cluster requires always more energy (between 2 and 3 eV more) than removing an H atom from a cluster of identical size.

The binding energy of the H·He.v complex indicates that when a moving H atom comes close to an He·v complex, the H atom will bind strongly to the substitutional He atom (or He·v complex), as the reaction $\mathrm{He} \cdot v + \mathrm{H} \rightarrow \mathrm{H} \cdot \mathrm{He} \cdot v$ will lead to an energy gain close to 1 eV. Furthermore, an H atom cannot destroy an He·v complex, which is very stable. The stability of the H·He·v complex was confirmed by Jiang et al. [82] who decomposed the strong He–H interaction into three parts, namely, an attractive force induced by valence electron depletion around He, repulsive forces contributed by elastic compression of the He–H separation and a H–H repelling in high-density electron gas. Mixed clusters 4He·4H·6v clusters were investigated by Lee et al. [83]. Their work confirms that an He atom occupies the vacancy centre whereas a H atom moves slightly away from it.

5.2. Interactions of He and H with SIAs

Regarding the interactions of He and H atoms with SIAs, little results are available. The SIA was found to bind with H [23] and He [41] in tungsten, the former being a lighter trap than the later. In Fe, He was also found to bind weakly with the SIA [74]. Regarding SIA clusters, Caturla and Ortiz [84] showed that their migration had a real impact on the desorption of He during isothermal annealing. Indeed, when all SIA clusters are considered mobile, they migrate and can annihilate at the various sinks (in the case studied, surfaces). No SIA is then available to release the He atoms trapped in the vacancies.

One final note on the topics of the interaction of He with point defects concerns trap mutation. Trap mutation or loop punching mechanism is a mechanism which takes place when an interstitial He cluster is large enough to spontaneously create a FP in order to release the pressure created by the He atoms. This is quite an important reaction as, as stated above, the point defects created can trap the He clusters. Trap mutation was proposed by Caspers et al. to explain the appearance in the thermal desorption spectrum of new peaks after implantation in pre-implanted Mo [85] of 0.15 keV He. They attributed these new peaks to the formation of a FP from He clusters trapped in a vacancy. This mechanism was also proposed to explain the experimental results of Thomas and Bastasz in Au [86] and there are now enough experimental proofs that clusters of helium atoms can displace metal atoms from their lattice sites. Preliminary calculations [70] indicate that trap mutation in W does not take place as easily as in Fe, i.e. for 5 He atoms [74] very probably because W is a stiffer material than Fe, and the formation energy of a SIA is higher.

5.3. Interactions of He and H with solute atoms

The influence of impurities on the behaviour of He or H in atoms has also been investigated as they have consequences on their diffusivity, as well as inhibit clustering or at least prevent the occurrence and consequently the outburst of large bubbles by providing many traps leading to the formation of very many small clusters rather than few large ones. On the other hand, Iwakiri et al. [87] argued that impurities could also affect trap mutation by providing strong traps for the otherwise mobile He atoms and lead to the formation of clusters large enough to induce loop punching or trap mutation.

Counts and co-workers [73] examined the interaction between 3d and 4d transition substitutional solutes in Fe as well as sp valence elements with H in Fe. They found that most of them, except Si, Cr, Mn, Co, and Mo trap H with positive binding energies up to 0.25 eV. The H–substitutional solute binding energies appeared to be roughly correlated with the solute atom's electronegativity and size, and the presence of a solute atom near a vacancy did not affect the vacancy-hydrogen binding provided the solute atom was not significantly larger than Fe. We have determined the binding energies in W of selected impurities with He and small He clusters [70]. In agreement with van der Kolk et al. [88] we find that most of the substitutional impurities we have investigated can trap He atoms as well as small He clusters. The exception is Re, and we anticipate thus that the introduction of Re, either to improve the mechanical properties or because of transmutation will not affect He transport in W. Unlike Kornelsen [21], we find that both C and O are also capable of trapping He atoms. The data in Fig. 3 clearly show the influence of the solute size, as the interaction of 3d TM solute is always larger than that of the bigger 4d and 5d TM solutes. 4d and 5d TM solutes are closer in sizes and their binding energies with He atoms are closer also. Furthermore, we find that, in general, early TM bind with He atoms less than late ones. The relationship between the trends obtained and the electronic structure is not obvious and requires further investigations.

Finally, an interesting result is that H or He atoms do not bind with C atoms in the absence of vacancies in Fe [68,53,73]. In contrast, in the presence of a vacancy, they form energetically stable complexes. The vacancy has thus the ability to bind two point defects that would otherwise repel one another. Furthermore, hydrogen is unable to displace C atoms from point defect clusters and instead binds to them [68]. In W, the situation differs as the

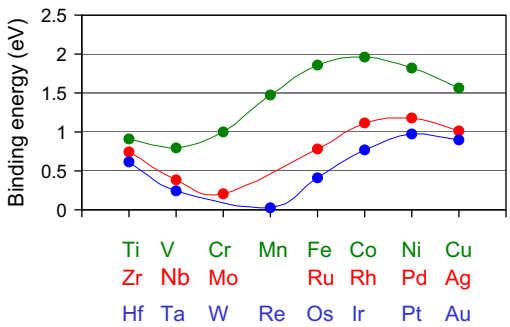

Fig. 3. Binding energy (eV) between substitutional TM solute atoms and He in W as predicted by DFT. The calculations were performed using the VASP code, in the PAW approach and 128 atom supercells. All the solute elements were found to be nonmagnetic.

binding energy between C and He has been found to be close to 0.37 eV without a vacancy [70].

5.4. Comparison between H, He, C and N

The four foreign interstitial atoms reviewed here bind attractively with the vacancy. As a result, the vacancy concentration in the form of solute-vacancy clusters is expected to increase as compared to that in pure W or pure α-Fe.

The data in Tables 1 and 2 indicate that the interaction strength of the FIAs with point defects increases according to the following order: H, C, N and He for both W and bcc Fe. The interactions of He in α-Fe or W metallic matrices are purely of elastic origin, whereas for H, C and N solute atoms, both elastic and chemical aspects contribute. For these later elements, the trends in their interaction energy with point defects (Tables 1 and 2) indicate that the size effect is important as the interaction strength increases with the atom size. Because of the balance between elastic and chemical interactions, H, C and N in the vicinity of a vacancy will also prefer an off centre position whereas He favours the substitutional position rather than an interstitial one.

The fact that in the W matrix, the interactions of the FIAs are usually larger is certainly due to the fact that W having a larger lattice parameter than α-Fe, the FIAs have more space.

6. Challenges and issues

The discussion presented above underlines the fundamental role played by electronic structure calculations in materials research nowadays. Despite their limitations, which can be assessed by the range of data provided in Tables 1 and 2, they are at the moment the most reliable techniques to investigate the interactions of solute atoms and point defects and are nowadays very commonly used. However, one needs to keep in mind that these techniques remain quite tricky and for instance, the enormous amount of data gathered so far indicate that magnetism and relaxation effects in DFT calculations are important to correctly predict the formation energies of the defects in Fe. Regarding He and H, as already pointed out, one needs to exert even more care to obtain meaningful data. Important issues in this field probably involve also more precise treatment of the van der Waals forces for He and the non-Born–Oppenheimer quantum mechanics for H [82].

Another important issue is that DFT calculations are done at 0 K and imported in models aiming at predicting the behaviour of a component in use, i.e. at room temperature at the least. In that regard, nonclassical effects at low temperatures (e.g. below 200 K in W for H diffusion [12]) may have effect in modelling TDS experiments but may not affect the microstructure evolution of radiation damage conditions which take place at elevated temperatures. However, it would be highly desirable to introduce more systematically entropy contribution in the static DFT calculations as was done for instance in [89] with an empirical potential.

As pointed out above, another very difficult issue is the assessment of the clusters behaviour (i.e. their stability, their life time, their diffusivity...). Finding the most stable configuration of clusters is also a very difficult task as (too) many possible configurations have to be investigated. Determining the mobility of these clusters is even more complicated as it can involve complex and correlated motion of the species it is composed of. The mobility of solute atoms or small solute clusters is very dependent on the details of the point defect diffusion mechanisms, especially on the way their formation energies and diffusion barriers depend on the local environment. In real materials, because of all the solute atoms and the impurities, the local environment will be very different from one place to another. It is thus desirable to develop techniques that systematically search for the minima and saddle points such as the ARTn method [48] in a DFT calculations.

For fast diffusing species such as He atoms, the most pertinent way to determine their mobility is probably through the use of dynamical methods such as MD in which the entropy contribution is automatically taken into account. First principles MD appears to be of fundamental importance and improvements in this regard concern the size of the cells as well as the simulation time which can be modelled in reasonable amount of CPU times. For larger clusters, one will have to turn to empirical potentials. This is not an easy task as can be judged by the number of Fe–He or Fe–C interatomic potentials developed so far and it is very important to introduce more of the knowledge acquired through electronic structure calculations in the building of the potentials. A nice example published recently is the Fe–He potential developed by Gao and co-workers [90] to study the mobility of He and He clusters in α-Fe. Regarding magnetic materials such as Fe, magnetism and its evolution as a function of temperature needs to be more properly accounted for in the empirical potential calculations, as defect properties may depend on magnetism. A noteworthy improvement in this regards which needs however, to be further developed has been proposed by Ma et al. [91]. The next challenge will then be to build multi-element empirical potentials, including solute elements, carbon and/or nitrogen as well as H and He.

Another issue stemming out this short review is that the determination of the correct migration barriers is not enough to predict macroscopic behaviours and one needs to use larger scale model such as MFRT, KMC techniques or more theoretical models to have access to "materials properties" such as the diffusion coefficients. A typical example is the diffusion of C atoms in α-Fe in the presence of Si [92] which was performed with a DFT calculation fed atomistic KMC code. This study shows that the interaction between Si and C strongly depends on distance, and its sign changes depending on the neighbour shells. At temperatures of about 1000 K, the strong repulsion between C and Si in the first and second coordination shells dominates and a mild reduction in the C diffusivity is observed, due to a decrease of the number of diffusion paths as the C atom cannot reach sites very close to Si. At lower temperatures of about 500 K, a balance between the strong repulsion of the first shells and the weak attraction of the further ones leads to a decrease of C diffusivity through both labyrinth mechanism and entrapment of C in the vicinity of Si. Such a complex behaviour could not have been deduced easily from a simple examination of the different binding and migration energies.

Another possible way of providing information closer to the macroscopic scale is the use of analytical methods which determine, from the interaction energies between, for instance, the vacancies and He atoms constituting a nHe·mv cluster, the cluster lifetime and diffusion coefficient, provided that the cluster lives

sufficiently long to pass many times through its various possible configurations. All these methods need to be further developed, the assumptions they rely on must be checked out and their limitations removed if possible.

Finally, before going on a "material behaviour" prediction mode with confidence, it is necessary to compare the atomistic data obtained with experimental results. However, this comparison is never straightforward as the experimental signal has to be interpreted using models which rely on the knowledge one has of the physics involved. Furthermore, "simulated materials" are perfect in contrast with real materials. A typical example is the binding energy of the mono-vacancy with C in Fe. Arndt and co-workers [93] examining a neutron irradiated Fe found by calorimetric measurements a large binding energy (0.41 eV) of C with a defect, which they postulate to be probably a vacancy. However, Wuttig et al. [94] examined by magnetic measurements the carbon and nitrogen trapping in Fe following low-temperature electron and neutron irradiation. They concluded that interstitial clusters formed during the low-temperature neutron irradiation acted as traps for carbon and nitrogen atoms, whereas vacancies were the trapping defects following electron irradiation. Little and Harries [95] also considered that the binding energy measured by Arndt and co-workers [93] very likely corresponds to the binding energy of carbon to an interstitial cluster. On the other hand, Takaki et al. [1] doing careful resistivity measurements in very pure Fe and C doped Fe following low temperature electron irradiations, estimated that the binding energy of a carbon atom with a vacancy is 1.1 eV, while Vehanen et al. [2] doing positron lifetime measurements on electron-irradiated high purity and C doped Fe found this binding energy to be 0.85 eV. Many of the experiments available nowadays were made 30 or 40 years ago. Since then, the influence of impurities, even in very residual amount, has been pointed out, and one research direction that needs to be pursued to characterise more properly the interactions between point defects and solute atoms is the setting up of new sets of simple experiments, such as the recovery experiments mentioned in this paper, on materials with the highest purity possible in order to eliminate unwanted effects, as well as experiments on model alloys with increasing chemical complexity to validate the models developed.

The use of a collaborative approach involving experiments, theories and modelling is, to our point of view, the most promising way to understand the many aspects of the solute point defect interactions and their consequences on the evolution of the microstructure.

7. Conclusions

The recent advances in the field of solute atoms (including He and H) interactions with point defects in iron and tungsten obtained mostly using electronic structure calculations have been reviewed. The interaction of solute atoms with point defects (vacancy and self-interstitial atom) in the Fe or W matrix has both elastic and chemical origins. For large size solutes, elastic effects are predominant, whereas for solute atoms with different electronic structures (which have very different number of d electrons) the chemical effects appear to be more important. For similar size solutes and matrices (e.g. 3d elements in the bcc Fe matrix) chemical interactions also seem to come into play strongly. The strength of the interactions of He with substitutional elements appears to depend on the element size in W.

Regarding the foreign interstitial atoms investigated in this review (C, N, H and He), all bind to vacancies and self interstitial atoms. The strength of the binding energy with the point defects increases according to the following order: H, C, N, He. The interactions are always stronger in W than in Fe. For both materials, the stability of small nHe·mv clusters against the thermal emission of vacancies or interstitial He atoms depends mainly on the relative concentrations of He and vacancies in the cluster.

Regarding the diffusion properties, in the case of Fe, transport of the solute via an interstitial mechanism seems possible for Cr, Mn and P, whereas a vacancy drag mechanism can be expected for late transition metal solutes and not for early transition metal solutes with the exception of Mn, Zr and Hf. In W, less results are available, and the data indicate that a vacancy drag mechanism can be expected at temperatures of interest for Fe, Rh, Os, Re, as well as P, Pb and K.

Among the issues raised by the review, the stability of point defect clusters as well as solute point defect clusters appear to be one of the most challenging. In order to solve this issue, advances are required both regarding the static methods used to determine the activation energies as well as dynamic ones, for electronic structure as well as empirical potential calculations. For the development of upper scale modelling of the microstructure, empirical potentials for classical MD simulations are required and an important challenge is to treat accurately multi-component elements representative of experimental alloys, as well as magnetic temperature effect for steels. In addition, the microstructure modelling techniques have to be validated thanks to dedicated experiments.

Acknowledgements

This work is part of the research program of the EDF-CNRS joint laboratory EM2VM (Study and Modelling of the Microstructure for Ageing of Materials).

It has been supported by

- CEA under the collaborative Contract Number V 3542.001 on Fusion engineering issues.
- CNRS under the programme interdisciplinaire énergie CHETEX.
- The European Commission FP7 project PERFORM-60, under Grant Agreement Number 232612.
- The European Commission FP7 project GETMAT under Grant Agreement Number 212175.

The research has been done using the CRI supercomputer of the Université Lille1 – Sciences et Technologies supported by the Fonds Européens de Développement Régional.

References

[1] Takaki S, Fuss J, Kugler H, Dedek U, Schultz H. The resistivity recovery of high purity and carbon doped iron following low temperature electron irradiation. Radiat Eff 1983;79:87–122.
[2] Vehanen A, Hautojarvi P, Johansson J, Yli-Kauppila J, Moser P. Vacancies and carbon impurities in α-iron: electron irradiation. Phys Rev B 1982;25:762–80.
[3] Becquart CS, Domain C. Modelling microstructure and irradiation effects. Met Mat Trans A 2011;42A:852–70.
[4] Terentyev DA, Lagerstedt C, Olsson P, Nordlund K, Wallenius J, Becquart CS, et al. Effect of the interatomic potential on the features of displacement cascades in α-Fe: a molecular dynamics study. J Nucl Mater 2006;351:65–77.
[5] Schilling W. Self interstitial atoms in metals. J Nucl Mater 1978;69–70:465–89.
[6] Domain C, Becquart CS. Ab initio calculations of defects in Fe and dilute Fe–Cu alloys. Phys Rev B 2001;65:24103–14.
[7] Fu CC, Willaime F, Ordejon P. Stability and mobility of mono- and di-interstitials in α-Fe. Phys Rev Lett 2004;92:175503–4.
[8] Nguyen Manh D, Horsefield AP, Dudarev SL. Self-interstitial atom defects in bcc transition metals: group-specific trends. Phys Rev B 2006;73:20101–4.
[9] Becquart CS, Domain C. Ab initio calculations about intrinsic point defects and He in W. Nucl Instr Meth Phys Res B 2007;255:23–6.
[10] Johnson RA. Interstitials and vacancies in α iron. Phys Rev 1964;134: A1329–36.
[11] Tanimoto H, Mzibayashi M, Nishimura H, Okuda S. A study of self interstitial atoms in W by means of low-temperature irradiations. J Phys IV 1996;C8-6 [C8-285–C8-288].
[12] Heinola K, Ahlgren T. Diffusion of hydrogen in bcc tungsten studied with first principle calculations. J App Phys 2010;107:113531–8.

[13] Derlet PM, Nguyen-Manh D, Dudarev SL. Multiscale modeling of crowdion and vacancy defects in body-centered-cubic transition metals. Phys Rev B 2007;76:054107–22.
[14] Stoller RE. The role of cascade energy and temperature in primary defect formation in iron. J Nucl Mater 2000;276:22–32.
[15] Becquart CS, Domain C. Ab initio contribution to the study of complexes formed during dilute FeCu alloys radiation. Nucl Instr Meth Phys Res B 2003;202:44–50.
[16] Borodin VA, Vladimirov PV. Diffusion coefficients and thermal stability of small helium–vacancy clusters in iron. J Nucl Mater 2007;362:161–6.
[17] Fu CC, Dalla Torre J, Willaime F, Bocquet JL, Barbu A. Multiscale modelling of defect kinetics in irradiated iron. Nature Mat 2005;41:68–74.
[18] van Veen A. Thermal helium desorption spectrometry (THDS) as a tool for the study of vacancies and self-interstitials. Mater Science Forum 1987;15–18:3–24.
[19] Maury F, Lucasson A, Lucasson P, Moser P, Faudot F. Interstitial migration in irradiated iron and iron-based dilute alloys: II. Interstitial migration and solute transport in FeNi, FeMn and FeCu dilute alloys. J Phys Cond Matter 1990;2:9291–307.
[20] Kornelsen EV, Van Gorkum AA. A study of bubble nucleation in tungsten using thermal desorption spectrometry: clusters of 2 to 100 helium atoms. J Nucl Mater 1980;92:79–88.
[21] Kornelsen EV. The interaction of injected helium with lattice defects in a tungsten crystal. Rad Eff 1972;13:227–36.
[22] Morishita K, Sugano R, Wirth BD, Diaz de la Rubia T. Thermal stability of helium–vacancy clusters in iron. Nucl Instr Meth Phys Res B 2003;202:76–81.
[23] Heinola K, Ahlgren T, Nordlund K, Keinonen J. Hydrogen interaction with point defects in tungsten. Phys Rev B 2010;82:094102–5.
[24] Allnatt AR, Lidiard AB. Statistical theories of atomic transport in crystalline solids. Rep Prog Phys 1987;50:373–472.
[25] Barbe V, Nastar M. Phenomenological coefficients in a dilute bcc alloy for the dumbbell mechanism. Phil Mag 2007;87:1649–69.
[26] Choudhury S, Barnard L, Tucker JD, Allen TR, Wirth BD, Asta M, et al. Ab-initio based modeling of diffusion in dilute bcc Fe–Ni and Fe–Cr alloys and implications for radiation induced segregation. J Nucl Mater 2011;411:1–14.
[27] Barashev AV. Monte Carlo simulation of phosphorus diffusion in α-iron via the vacancy mechanism. Phil Mag Lett 2005;85:1539–55.
[28] Barashev A V, Arokiam AC. Monte Carlo modelling of Cu atom diffusion in α-Fe via the vacancy mechanism. Phil Mag Lett 2006;86:321–32.
[29] Le Claire AD. Solute diffusion in dilute alloys. J Nucl Mater 1978;69–70:70–96.
[30] Domain C, Becquart CS. Diffusion of phosphorus in α-Fe: An ab initio study. Phys Rev B 2005;71:21413–9.
[31] Vincent E, Becquart CS, Domain C. Ab initio calculations of self-interstitial interaction and migration with solute atoms in bcc Fe. J Nucl Mater 2006;359:227–37.
[32] Kresse G, Hafner J. Ab initio molecular dynamics for liquid metals. Phys Rev B 1993;47:558–61.
[33] Barbu A, Lidiard AB. Solute segregation in dilute bcc alloys under irradiation. Phil Mag A 1996;74:709–22.
[34] Soisson F, Barbu A, Martin G. Monte Carlo simulations of copper precipitation in dilute iron-copper alloys during thermal ageing and under electron irradiation. Acta Mater 1996;44:3789–800.
[35] Le Bouar Y, Soisson F. Kinetic pathways from embedded-atom-method potentials: influence of the activation barriers. Phys Rev B 2002;65: 094103–94114.
[36] Soisson F, Fu CC. Cu-precipitation kinetics in α-Fe from atomistic simulations: vacancy-trapping effects and Cu-cluster mobility. Phys Rev B 2007;76: 214102–12.
[37] Ohnuma T, Soneda N, Iwasawa M. First-principles calculations of vacancy–solute element interactions in body-centered cubic iron. Acta Mater 2009;57:5947–55.
[38] Olsson P, Klaver TPC, Domain C. Ab initio study of solute transition-metal interactions with point defects in bcc Fe. Phys Rev B 2010;81: 054102–54112.
[39] Amara H, Fu CC, Soisson F, Maugis P. Aluminum and vacancies in α-iron: dissolution, diffusion, and clustering. Phys Rev B 2010;81:174101–11.
[40] Becquart CS, Domain C. An object kinetic Monte Carlo simulation of the dynamics of helium and point defects in tungsten. J Nucl Mater 2009;385: 223–7.
[41] Becquart CS, Domain C, Sarkar U, DeBacker A, Hou M. Microstructural evolution of irradiated tungsten: ab initio parameterization of an okmc model. J Nucl Mater 2010;403:75–88.
[42] Greenwood LR, Garner FA. Transmutation of MO, Re, W, Hf, and V in various irradiation test facilities and STARFIRE. J Nucl Mater 1994;212–215:635–9.
[43] Lhuillier PE. PhD thesis. Université d'Orléans; 2010.
[44] Lucasson P, Maury F, Lucasson A. Interstitial diffusion in bcc metals and dilute alloys. Rad Eff Lett 1985;85:219–23.
[45] Meslin E, Fu CC, Barbu A, Gao F, Willaime F. Theoretical study of atomic transport via interstitials in dilute Fe–P alloys. Phys Rev B 2007;75: 094303–94308.
[46] Olsson P, Domain P, Wallenius J. Ab initio study of Cr interactions with point defects in bcc Fe. Phys Rev B 2007;75:014110–14112.
[47] Olsson P. Ab initio study of interstitial migration in Fe–Cr alloys. J Nucl Mater 2009;386–388:86–9.
[48] Marinica MC, Willaime F, Mousseau N. Energy landscape of small clusters of self-interstitial dumbbells in iron. Phys Rev B 2011;83 [094119–14].
[49] Domain C, Becquart CS, Foct J. Ab initio study of foreign interstitial atom (C, N) interactions with intrinsic point defects in α-Fe. Phys Rev B 2004;69: 144112–6.
[50] Fu CC, Meslin E, Barbu A, Willaime F, Oison V. Effect of C on vacancy migration in α-Fe. Sol State Phen 2008;139:157–64.
[51] Kabir M, Lau TT, Lin X, Yip S, Van Vliet KJ. Effects of vacancy-solute clusters on diffusivity in metastable Fe–C alloys. Phys Rev B 2010;82:134112–8.
[52] Nguyen-Manh D. Ab initio modelling of point defect impurity interaction in tungsten and other bcc transition metals. Adv Mater Res 2009;59:253–6.
[53] Ortiz CJ, Caturla MJ, Fu CC, Willaime F. Influence of carbon on the kinetics of He migration and clustering in α-Fe from first principles. Phys Rev B 2009;80: 134109–10.
[54] Johnson RA, Bisson CL, Wilson WD. Volume expansion due to substitutional and interstitial helium atoms in bcc metals. Rad Eff Def Sol 1975;25:155–6.
[55] Takai K, Shoda H, Suzuki H, Nagumo M. Lattice defects dominating hydrogen-related failure of metals. Acta Mater 2008;56:5158–67.
[56] Myers SM, Baskes MI, Birnbaum HK, Corbett JW, DeLeo GG, Estreicher SK, et al. Hydrogen interactions with defects in crystalline solids. Rev Mod Phys 1992;64:559–617.
[57] van Mourik T, Gdanitz RJ. A critical note on density functional theory studies on rare-gas dimers. J Chem Phys 2002;116:9620–2.
[58] Tateyama Y, Ohno T. Stability and clusterization of hydrogen-vacancy complexes in a -Fe: An ab initio study. Phys Rev B 2003;67:174105–10.
[59] Jiang DE, Carter EA. Diffusion of interstitial hydrogen into and through bcc Fe from first principles. Phys Rev B 2004;70:064102–64109.
[60] Fu CC, Willaime F. Ab initio study of helium in α-Fe: Dissolution, migration, and clustering with vacancies. Phys Rev B 2005;72 [064117–6].
[61] Becquart CS, Domain C. The migration energy of He in W revisited by Ab initio calculations. Phys Rev Lett 2006;97:196402–4.
[62] Seletskaia T, Osetsky Y, Stoller RE, Stocks GM. First-principles theory of the energetics of He defects in bcc transition metals. Phys Rev B 2008;78: 134103–9.
[63] Zu XT, Yang L, Gao F, Peng SM, Heinisch HL, Long XG, et al. Properties of helium defects in bcc and fcc metals investigated with density functional theory. Phys Rev B 2009;80:054104–54106.
[64] Lucas AA. Helium in metals. Physica B 1984;127:225–39.
[65] Soltan AS, Vassen R, Jung P. Migration and immobilization of He and H in gold and tungsten at low temperatures. J Appl Phys 1991;70:793–7.
[66] Henriksson KOE, Nordlund K, Krasheninnikov A, Keinonen J. Difference in formation of hydrogen and helium clusters in tungsten. App Phys Lett 2005;87 [163113–3].
[67] Becquart CS, Domain CA. Density functional theory assessment of the clustering behaviour He and H in tungsten. J Nucl Mater 2009;386-388:109–11.
[68] Monasterio PR, Lau TT, Yip S, Van Vliet KJ. Hydrogen-vacancy interactions in Fe–C alloys. Phys Rev Lett 2009;103:085501–85504.
[69] Nørskov JK. Covalent effects in the effective medium theory of chemical binding: hydrogen heats of solution in the 3d metals. Phys Rev B 1982;26:2875–85.
[70] Becquart CS, Barthe MF, DeBacker A. Physica Scripta T 2011;145:014048–6.
[71] Kato D, Iwakiri H, Morishita K. Formation of vacancy clusters in tungsten crystals under hydrogen-rich condition. J Nucl Mater 2011;417:1115–8.
[72] Pronsato LE, Pistonesi C, Juan A. Density functional study of H–Fe vacancy interaction in bcc iron. J Phys Cond Matter 2004;16:6907–16.
[73] Counts WA, Wolverton C, Gibala R. First-principles energetics of hydrogen traps in a–Fe: point defects. Acta Mater 2010;58:4730–41.
[74] Fu CC, Willaime F. Interaction between helium and self-defects in a-iron from first principles. J Nucl Mater 2007;367–370:244–50.
[75] Caturla MJ, Ortiz CJ, Fu CC. Helium and point defect accumulation: (ii) kinetic modelling. C R Physique 2008;9:401–8.
[76] Ortiz CJ, Caturla MJ, Fu CC, Willaime F. He diffusion in irradiated a–Fe: an ab initio based rate theory model. Phys Rev B 2007;75:100102–4.
[77] Borodin VA, Vladimirov PV, Möslang A. A lattice kinetic Monte-Carlo modelling of helium–vacancy cluster formation in bcc iron. J Nucl Mater 2007;367–370:286–91.
[78] Liu YL, Zhang Y, Zhou HB, Lu GH, Liu F, Luo G-N. Vacancy trapping mechanism for hydrogen bubble formation in metal. Phys Rev B 2009;79:172103–4.
[79] Ohsawa K, Goto J, Yamakami M, Yamaguchi M, Yagi M. Trapping of multiple hydrogen atoms in a tungsten monovacancy from first principles. Phys Rev B 2010;82 [184117–6].
[80] Besenbacher F, Myers SM, Nordlander P, Nørskov JK. Multiple hydrogen occupancy of vacancies in Fe. J Appl Phys 1987;61:1788–94.
[81] Lee HT, Haasz AA, Davis JW, Macaulay-Newcombe RG. Hydrogen and helium trapping in tungsten under single and sequential irradiations. J Nucl Mater 2007;360:196–207.
[82] Jiang B, Wan FR, Geng WT. Strong hydrogen trapping at helium in tungsten: Density functional theory calculations. Phys Rev B 2010;81:134112–8.
[83] Lee S-C, Choi J-H, Lee JG. Energetics of He and H atoms with vacancies in tungsten: First-principles approach. J Nucl Mater 2009;383:244–6.
[84] Caturla MJ, Ortiz CJ. Effect of self-interstitial cluster migration on helium diffusion in iron. J Nucl Mater 2007;362:141–5.
[85] Caspers LM, Fasteneau R, van Veen A, van Heugten WFWM. Mutation of vacancies to divacancies by helium trapping in molybdenum. Phys Stat Sol 1978;46:541–6.
[86] Thomas GJ, Bastasz R. Direct evidence for spontaneous precipitation of helium in metals. J Appl Phys 1981;52:6426–8.

[87] Iwakiri H, Yasunaga K, Morishita K, Yoshida N. Microstructure evolution in tungsten during low-energy helium ion irradiation. J Nucl Mater 2000;283–287:1134–8.
[88] van der Kolk GJ, van Veen A, de Hosson JThM, Caspers LM. Clustering phenomena of implants in tungsten observed with THDS. Nucl Inst Meth Phys Res B 1985;6:517–24.
[89] Marinica C, Willaime F. Orientation of interstitials in clusters in α-Fe: a comparison between empirical potentials. Solid State Phenom 2007;107: 67–74.
[90] Gao F, Deng H, Heinisch HL, Kurtz RZ. A new Fe–He interatomic potential based on ab initio calculations in α-Fe. J Nucl Mater 2011;418:115–20.
[91] Ma PW, Woo CH, Dudarev SL. Large-scale simulation of the spin-lattice dynamics in ferromagnetic iron. Phys Rev 2008;78 [024434–12].
[92] Simonovic D, Ande CK, Duff AI, Syahputra F, Sluiter MHF. Diffusion of carbon in bcc Fe in the presence of Si. Phys Rev B 2010;81:054116–54118.
[93] Arndt EA, Damask AC. Kinetics of carbon precipitation in irradiated iron – III. Calorimetry. Acta Met 1964;12:341–5.
[94] Wuttig M, Stanley JT, Birnbaum HK. Interstitial solute trapping in irradiated and quenched iron. Phys Stat Sol 1968;27:701–12.
[95] Little EA, Harries DR. Radiation-hardening and recovery in mild steels and the effects of interstitial nitrogen. Met Sci J 1970;4:188–95.